H.C.B-IV1005 IVECO/FUSO CRANKSHAFT FRONT OIL SEAL INSTALLATION/ TIMING COVER CENTERING TOOL

* The tool is designed for crankshaft front gasket installation and timing cover centering.

Rating: Not Rated Yet
Price:

Sales price:

Discount:

Ask a question about this product

Manufacturer: HCB Specialty Tools

Description

Product Description:

SKU: HCB-IV1005 IVECO/FUSO CRANKSHAFT FRONT OIL SEAL INSTALLATION/ TIMING COVER CENTERING TOOL

Product SKU:

Manufacturer No.:
IV1005-IV1005

Country of Origin:
Taiwan
Brand:
HCB

Product Specifications (Features):

* The tool is designed for crankshaft front gasket installation and timing cover centering.

* Applicable: IVECO FOR DAMAILER CHRYSLER FUSO (LATTICE&Bolster's)

* Matrix Info.:

* IVECO OEM no.:42 -99366456
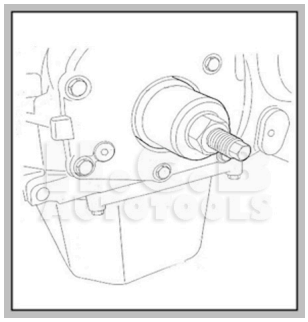
* CHRYSLER OEM no.:42 -99366456