H.C.B-A1965 BMW (B37/B38) CRANKSHAFT FRONT SEALING RING INSTALLER

* The crankshaft redial sealing ring has both a lip and a protective lip.

Rating: Not Rated Yet
Price:

Sales price:

Discount:

Ask a question about this product

Manufacturer: HCB Specialty Tools

Description

Product Description:

B37 BMW (B37/B38) CRANKSHAFT FRONT SEALING RING INSTALLER

Product model:

Modelline No.:
H.C.B.-A1965

Country of Origin:
Taiwan
Brand:
H.C.B.
Product Specifications Features:

* The crankshaft radial sealing ring has both a lip and a protective lip.

* This tool is designed to prevent damage when assembling the cover to the crankshaft flange.

* Application: BMW(B37/B38) 1.5L(F01/ F18/G11/G12)

* BMW OEM no.:11 2 427 566

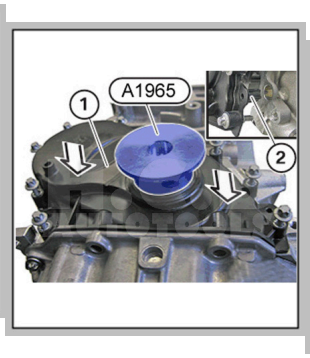
A1965
1
2

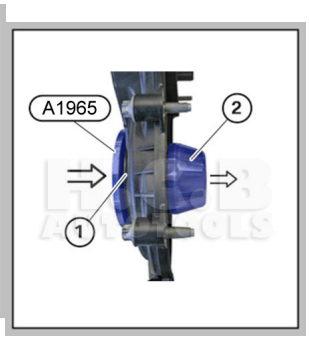
A1965
2
1