H.C.B-A1420 Mercedes-Benz (M137/M275/M285) TIMING TOOL KIT

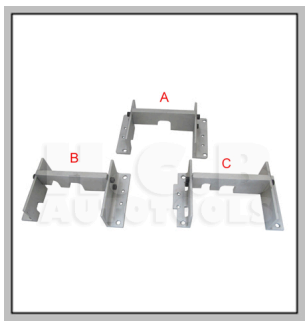

* This master tool is designed for positioning the camshaft in 30 degree TDC position. * Application: M275.M285: The set C only used for left bank of cylinder and A&B used for right bank. M137: Use the set A&B to loosen and tighten mounting screws for t

Rating: Not Rated Yet
Price:

Sales price:

Discount:

Ask a question about this product

Manufacturer: HCB Specialty Tools

Description

Product Description :
Mercedes-Benz (M137/M275/M285) TIMING TOOL KIT
?Product Info?
Model/Item No. :
H.C.B-A1420
Country of Origin :
Taiwan
Brand :
H.C.B
Product Specifications /Features :

*** This master tool is designed for positioning the camshaft in 30 degree TDC position.**
*** Application: M275.M285: The set C only used for left bank of cylinder and A&B used for right bank.**
M137: Use the set A&B to loosen and tighten mounting screws for the camshaft sprocket and adjusting the timing.
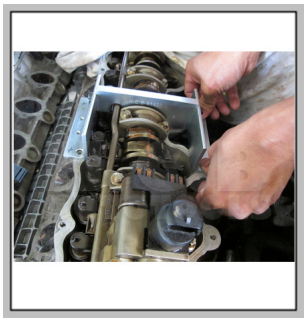
Primary Competitive Advantages :
Well and High Quality Control, Prompt Delivery, Competitive Prices
Sales Method :
Export, Manufacture
Payment Term :
T/T, L/C at Sight